DS-PWA64-M-WE(B)
AX PRO (868MHz)

- TCP/IP, Wi-Fi, and 4G network
- New generation wireless protocol: Tri-X(up to 2000m)/Cam-X(up to 800m)
- Long RF transmission distance
- Connects up to 64 wireless zones/outputs (including 48 PIRCAMs), 32 wireless keyfobs, 2 repeaters, 4 sounders, 8 tag readers and keypads.
- Supports up to 32 network users, including 1 installer, 1 administrator, and 30 normal users
- Voice prompt
- Configuration via Web client, mobile client, and Convergence Cloud
- Hik-Connect and Hik-ProConnect configuration depends on the user access level
- Pushes alarm notification via messages or phone calls
- Views live videos from Hik-Connect
- Alarm video clips via emails and APP
- Supports LED indicator to indicates system status
- 4950 mAh lithium backup battery
- SIA-DC09 protocol, and supports both Contact ID and SIA data format
- Supports Hik-IP Receiver and Hik-IP Receiver Pro for ARC communication

▪ Specification

Software features	
Area	16
Zones	64 (up to 48 PIRCAMs)
Onboard video clips	2+6(SD/NVR)
Installer	1
User	30
Admin	1
Voice Prompt	Supported
Loudspeaker built in	Supported
Memory Log stored	5000
Programming tools	Hik-Connect/Hik-ProConnect/Web Portal/ IVMS4200/ Convergence Cloud
Firmware upgrade	APP/Web Portal
Arm modes	Away/Stay
Automatic Arm/Disarm Timers	Supported
Forced Arming with Open Zones	Supported
Diagnostics via the APP or Web	Supported
ARC protocol	SIA DC09 (SIA level 2, Contact ID), ISUP, ISAPI (SDK) Hik-IP Receiver & Hik-IP Receiver Pro (Sur-Gard & Ademco 685) Supports video verification and remote control
User APP for operating	Supported
Installer APP for programming	Supported
Web server for maintenance (offline configuration)	Supported
Hardware features	
3/4G on board	Supported
Netowrk interface	1,100 Mbps/10 Mbps
Wi-Fi	2.4GHz
SIM slot	Dual
Tag reader built-in	NA
Display	
LEDs Status	Arm/Disarm, Alarm, Tamper, Fault, Cloud, Power
Electrical characteristics	
Power supply	Built in power supply
Battery type	Built-in Li Battery
Battery life span	Up to 12 hours at normal temperature (The battery working time can be significantly reduced at low temperatures)
Wireless transmission	
RF frequency	868 Mhz
Transmission Range(Free Space)	up to 2,000m
General	
Operation temperature	-10 °C to +55 °C (please make sure the adapter is connected)
Shell material	Plastic
Dimension(WxHxD)	170.0 mm (6.7") × 170.0 (6.7") mm × 38.6 mm (1.5")
Weight	557.5 g (19.7 oz)
Color	White

Device management	
Keyfob	32
Wireless sounder	4
Tag reader	8 (Share with keypad)
Keypad	8 (Share with Tag Reader)
Wireless Repeater	2
Tag	32
Multi Transmitter	4
Access control	16
Energizer	8
PIR Cam	48 (Share with RX Wireless Sounders, Smoke)

▪ Dimension

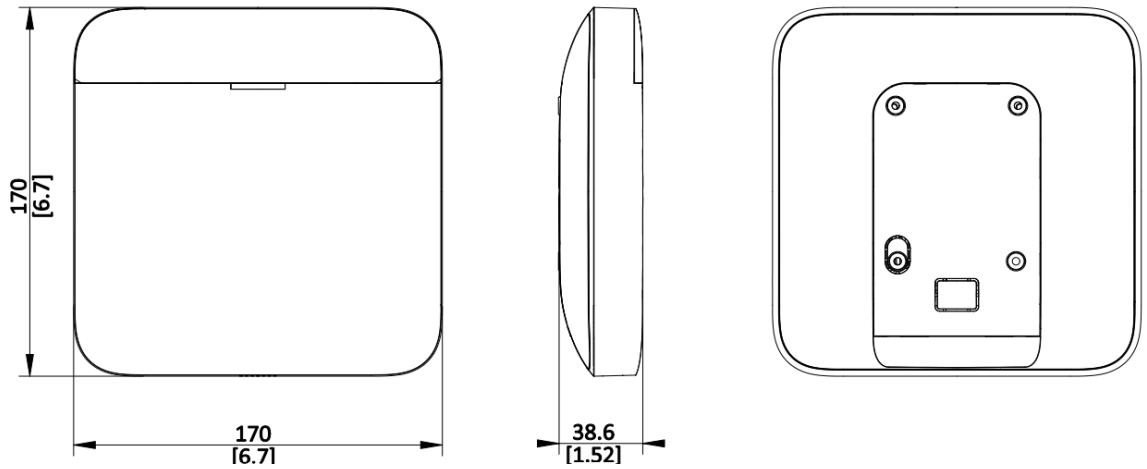

See Far, Go Further

www.hikvision.com
support@hikvision.com

© Hangzhou Hikvision Digital Technology Co., Ltd. Unless otherwise agreed, Hikvision makes no warranties, express or implied. We reserve the right to introduce modifications without notice.

HIKVISION®